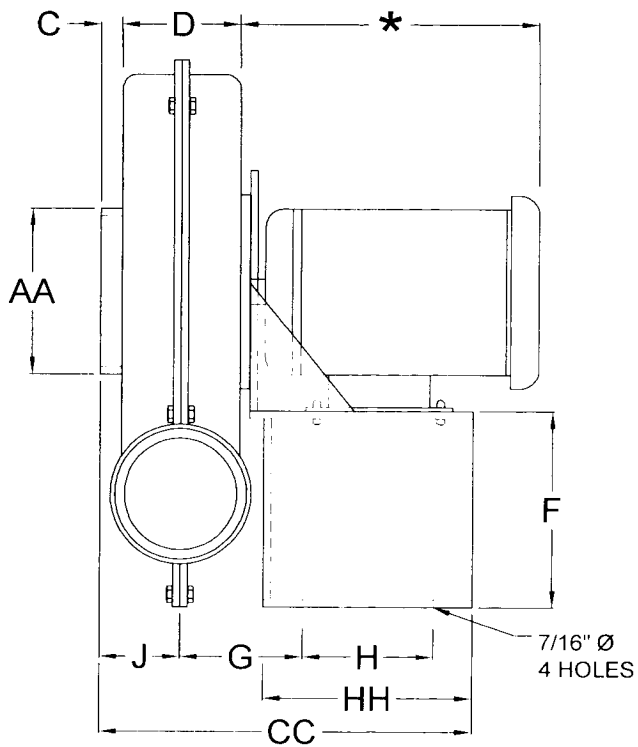

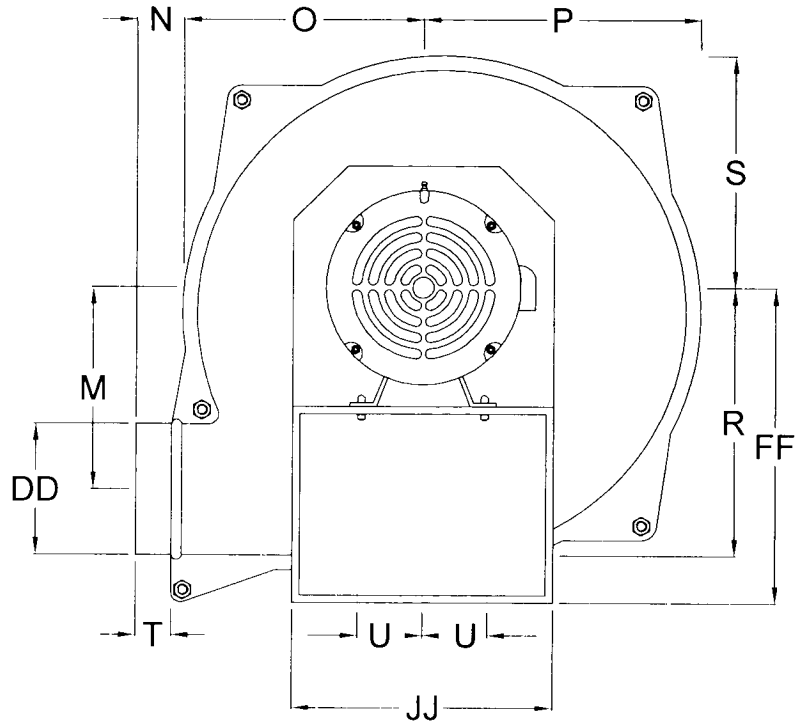

CLOCKWISE – BOTTOM HORIZONTAL SHOWN ABOVE

MODEL #	MOTOR FRAME	C	D	F	G	H	J	M	N	O	P	R	S	T	U	AA	CC	DD	FF	HH	JJ
ADP-8	56	1-1/4	3-3/4	6	4-1/4	5-1/2	3-1/8	4-1/8	1-3/8	4-1/2	5-1/4	6-1/4	4-3/4	1	3-1/2	4	14	4	9-1/2	7-7/8	9-1/2
ADP-9	56-143T-145T	1-1/4	3-3/4	6	4-1/4	5-1/2	3-1/8	5-5/8	1-3/8	5-7/8	7	7-3/4	6-3/8	1	3-1/2	5	14	4	9-1/2	7-7/8	9-1/2
ADP-10	56	1-1/4	4-1/4	7	4-1/2	5-1/2	3-7/16	6-9/16	1	6-7/8	9-7/16	9	7-13/16	1	3-1/2	6	14-1/2	5	10-1/2	7-7/8	7
	143T-145T																				9
ADP-12	56-143T-145T	1-5/16	4-1/4	8	4-1/2	5-1/2	3-3/8	7-3/8	1-1/8	7-5/8	9-1/16	10-3/16	7-9/16	1	3-1/2	7	14-1/2	6	11-1/2	7-7/8	9-1/2
	182T-184T			7	4-7/8	8-3/4									4-7/8		18-1/4			11-3/8	12-1/2
ADP-14	143T-145T	1-5/8	5-1/4	9-1/2	5-1/4	5-1/2	4-1/8	8	1	8-5/8	9-7/8	11-1/4	9-1/2	1	3-1/2	8	15	6	13	7-7/8	9-1/2
	182T-184T			8-1/2	5-7/8	8-3/4									4-7/8		18-1/2			11-3/8	12-1/2
ADP-15	182T-184T	1-7/16	6	9	6	8-3/4	4-3/8	8	1-3/4	9-3/8	10-7/8	11-15/16	9-15/16	1	4-7/8	10	20-1/8	8	13-1/2	11-3/8	12-1/2
	213T-215T																		14-1/2		13-1/2
ADP-15	143T-145T 182T-184T 213T-215T 254T-256T	1-7/16	6	9	6	8-3/4	4-3/8	8	1-3/4	9-3/8	10-7/8	11-15/16	9-15/16	1	4-7/8	8	20-3/8	8	13-1/2 14-1/2	11-3/8	12-1/2

CAST ALUMINUM PRESSURE BLOWERS

AMERICRAFT MANUFACTURING CO

P.O. Box 1108
Mason, Ohio 45040-1108

AMC NO.

Cust NO.

Project

Notes
1. * VARIES WITH MOTOR
2. 10" INLET AVALABLE FOR ADP-15

Drawn by: A.Plaza

Certified by

File: Cast Aluminum Pressure Blowers

Page Number: 1 of 1

Revision: B

Scale: Not to scale

Date: 09/27/10